# FARM KING ALLIED INC.

A John Buhler Company

# 1988

## OPERATORS MANUAL

## PORTABLE AUGERS

**FARM KING PRODUCTS**
301 Mountain Avenue
Box 1450 R0G 1J0
Morden, MB, Canada
(204) 822-4467

**ALLIED PRODUCTS**
1201 Regent Avenue W.
Box 1003 R3C 2W5
Winnipeg, MB, Canada
(204) 661-8711

**THIS SAFETY ALERT SYMBOL MEANS:**
**ATTENTION!**
**BE ALERT!**
**YOUR SAFETY IS INVOLVED!**

*Your safety is in your hands*

# 1988

## OPERATORS MANUAL

## PORTABLE AUGERS

# OPERATING INSTRUCTIONS

All augers may be elevated up to 45 degrees; however, for best operating efficiency, 35 degrees should not be exceeded. At angles over 35 degrees the capacity and life of the auger decreases.

Never operate an empty auger for over one minute as the flighting and housing will experience excessive wear.

To position the auger, always tow or move the auger in the down position to a point as close as possible to the bin or barn.

⚠ CAUTION: Always keep the wheels level. Raise the auger to the desired height and back the auger into position. Rest the head on some support. As an auger is emptied the head becomes heavy, the tail becomes light, and the auger could tip.

⚠ CAUTION: Never place blocks under the wheels to increase the elevation of the auger.

Be sure the wheels are free to move and no one is standing close to the auger when raising or lowering. Never attempt to raise or lower the auger while it is in operation.

The auger is equipped with a safety brakewinch. The auger may be raised or lowered by simply turning the winch handle in the proper direction until the desired discharge height is obtained.

Never have less than three wraps of cable on the drum of the winch.

⚠ CAUTION: All wiring should be done by a competent electrical contractor to assure the motor is receiving the correct voltage and the cable will carry the correct load.

The life of a motor is greatly reduced if it is run at too high or too low voltage. Also, a motor cannot develop full power if the cable is too small. The electrical supply to each motor should include an enclosed safety switch or circuit breaker of the correct size to protect the motor from being overloaded. The switch should be under a padlock to prevent the motor from being turned on by accident while working on or moving the auger. This will also prevent unauthorized persons or children from operating the motor. A magnetic starter should be used to shut off the motor in case of low voltage, loss of power, or overloading the motor.

The motor must then be started manually.

Power Take-Off drives are designed for tractors with 540 RPM power take-off and should not be run by tractors with 1000 RPM power take-off.

To assure a long life from a tumbler shaft, operate the shaft at the least angle possible and always keep the tractor axle parallel to the side of the auger housing.

⚠ CAUTION: Always maintain at least a 6" lap on the tumbler shields. Be sure they turn freely and make certain everyone stands clear of tractor, tumbler shaft, and auger before engaging power take-off. Be sure ends are securely connected to the auger and tractor.

## SAFETY INSTRUCTIONS

The safety of the operator of any piece of equipment is of prime importance to the manufacturer and the following precautions should be taken when operating, starting or doing any maintenance work on this auger.

Always transport the auger in the down position carrying the weight of the auger on the winch cable and not on the transport stops.

When moving the auger on a road use red flag, or at night, if absolutely necessary, accessory lights for adequate warning to operators of other vehicles.

The auger must be on a level surface and the wheels free to move when raising or lowering. Everyone should be kept clear during these operations.

Never stand under the auger while raising or lowering.

When filling tall bins, tanks or granaries, it is advisable to anchor the auger to the bin or building to prevent it from being tipped over by the wind or a sudden movement. The upper end of auger should rest on some support when in operation.

Keep hands, feet and clothing away from exposed flighting and all moving parts. Do not allow children or anyone other than the operator close to the auger when in operation.

Before attempting to service, adjust or unclog an auger, disengage drive and shut off engine. In the case of an electric motor, shut off switch and unplug the connection.

Never operate an auger with the tail end off the ground.

When storing, the tail should be tied or weighted to prevent children or others from tipping the auger. The power source should be fixed in such a way that no one except an authorized person could start the unit.

Never raise the tail of an auger above waist high as the balance shifts foreward and the auger will tip over.

### ⚠ CAUTION

1. Read and understand the Operator's Manual before operating.
2. Keep all safety shields and devices in place.
3. Make certain everyone is clear before operating or moving machine.
4. Keep hands, feet and clothing away from moving parts.
5. Shut off power to adjust, service or clean.
6. Support discharge end or anchor intake end to prevent upending.
7. Disconnect power before resetting motor overload.
8. Empty auger before moving, to prevent upending.
9. Lower auger to transport position for transporting.
10. Make certain electric motors are grounded.

Before engaging power take-off, start tractor and idle engine. Engage power take-off slowly and bring PTO RPM up to recommended speed of 500 RPM for 6", 7" & 8" augers.

Before stopping auger (except in an emergency) let all grain empty out of the auger, idle engine then disengage power take-off. Shut off tractor.

NOTE: When operating an auger for the first time when new or at the beginning of a season, run only partially full until flighting becomes polished. It is always a good idea to check the flighting for freedom of movement by turning pulley or tumbler shaft by hand before connecting to a power source. Other items to check are the head (spout) and intake cage for bird nests or other obstructions before starting the auger.

IMPORTANT: Always lower auger before transporting and allow the weight of the auger to rest on the winch cable and not on the transport stops.

⚠ CAUTION: When towing the auger, never exceed 20 miles per hour.

IMPORTANT: Do not install the clevis pin (No.70) in the back hole of the hitch (No.69) when towing as this will weaken the assembly.

Always use a flag, or at night, a signal light when towing an auger on a road. Check your local regulations for further safety devices in this regard.

## MAINTENANCE & LUBRICATION

Check condition of winch cable occasionally and replace if it shows wear. The greatest wear will occur on the first few wraps around the drum of the winch.

Lubricate the tumbler shaft universal joints every five hours. Grease the PTO shear yoke before using PTO for the first time.

Oil the moving parts of the winch two times per year.

Check the oil level of the gearbox one time per year and maintain the level at ½ full. Use SAE90.

## STORAGE

The auger should be stored in a dry place if possible. If stored outside, lower auger to its lowest position and tie the tail end down so that no one can accidently overturn it.

Clean auger thoroughly as dirt draws moisture and causes metal to rust. If the auger has been used to move fertilizer, clean thoroughly and apply oil or grease on entire flighting and inside the housing to stop and prevent further corrosion.

Remove belts and store in a cool dry place if auger is to be left outdoors.

At this time check all moving parts for wear and order replacement parts from your nearest dealer.

When taking the auger out of storage, clean it thoroughly and check for obstructions at the inlet and outlet ends. Check the oil in the gearbox .

Check all bolts and set screws.

# WARRANTY

Farm King Ltd. warrants its products to be free from defect in factory workmanship and material under normal use and service, when set-up and operated according to factory instruction. Warranty should be handled through the authorized selling dealer or distributor. Warranty is subject to the following condition:

* WARRANTY CLAIMS:

  Must be completed within 30 days of replacement of part or parts. Claim must include serial number of machine, date of delivery, and all other necessary particulars including part numbers and explanation of problem.

* WARRANTY PARTS:

  Must be kept for Farm King inspection unless otherwise specified.
  NOTE: Special 2-year parts warranty on augers manufactured in 1982 and later.

* WARRANTY LABOUR:

  Any labour subject to warranty must be authorized by Farm King. Labour allowance will be handled according to established service policy.

* WARRANTY LIMITATIONS:

  Warranty will not be granted on any machine that has been altered or modified in any way.

  Warranty on P.T.O. shafts, cylinders, hubs, and other trade accessories are limited to the warranties made by the respective manufacturers. Tires and tubes are warranted directly by the manufacturer only and not Farm King.

* GOVERNMENT LEGISLATION

  Warranty terms and conditions are subject to provincial or state legislation.

# FARM KING PORTABLE GRAIN AUGER ASSEMBLY INSTRUCTIONS

1. Assemble the BASIC AUGER section #1 to the EXTENSION section #2 making sure the flighting is aligned and locked with a 3/8" x 2" Grade 8 cap screw and lock nut.

   Use 3/8 x 1 cap screws, lock washers and hex nuts to fasten the auger rings together. Align the two sections before tightening the bolts. be sure to tighten bolts evenly - first one side and then the other.

   Attach the INTAKE ASSEMBLY #66 using 3/8 x 1 3/4 cap screws, lock washers and hex nuts.

2. Connect the extension DRIVE LINE #9 to the basic drive line #8.

3. Attach COUPLER #56 to extension drive line #9 using 1/4 x 1/4 x 3 1/2 key and 3/8 x 3/8 socket set screw.

   NOTE: The pinion shaft of the gearbox should protrude into the 4" coupler at least 1 3/4" as shown in diagram.

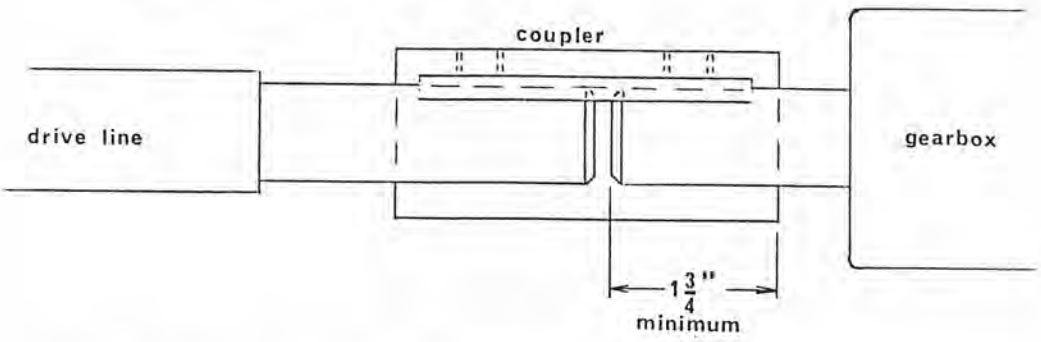


4. Install GEARBOX #74 on mounting plate using 7/16 x 3/4 cap screws and lock washers.

5. Mount the two UNDERCARRIAGE ARMS #5A and #5B to gearbox. The #5A arm has a wider ring and goes on the pulley side of the gearbox. A TIE PLATE #5D is used to connect the arms. Use 3/8 x 1 cap screws, lock washers and hex nuts. NOTE: Be sure the rings on the undercarriage arms are free and are lubricated so they will pivot properly.

   Bolt the undercarriage arms to the AXLE #5C using 7/16 x 1 1/4 cap screws, lock washers and hex nuts.

6. Fasten TRACK STOPS #25 as per illustration according to the length of auger. (Upper right hand corner of drawing #2)

7. Remove the larger cap screw from the track roller assembly and insert the assembly into the telescoping yoke (#10) so that the chain link points towards the auger intake end. NOTE: The larger cap screw must be locked with a jam nut.

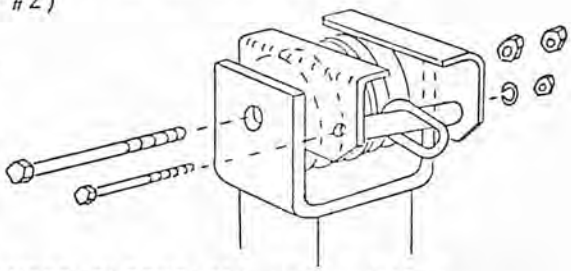

8. Bolt the two LIFT ARMS #6A and #6B to the CENTER SLEEVE #6C using 3/8 x 1 1/4 cap screws, lock washers and hex nuts on the sides of the sleeve and 1/2 x 5 cap screws, lock washers and hex nuts to clamp the top end of the lift arms to the sleeve. Attach the lift arm assembly (with the TELESCOPING TUBE #10) to the undercarriage axle using 5/8 x 2 cap screws, nuts and jam nuts.

9. Fasten WINCH #95 to lift arms #6 using 3/8" x 1" cap screws, lock washers and nuts. There is also a flat washer provided for the bolt in the slotted hole.

10. A) Insert cable #91 into loop on lift arm #10 using cable clamps and tighten.
    B) Thread cable as per illustration. Fasten cable to winch spool using cable clamp supplied with the winch.

11. Mount WHEELS #104 on undercarriage using 1/2" wheel bolts.

12. Install HANGER #7 in undercarriage so that the upper flange with 2 holes is on pulley side of auger. Use 1/4 x 1 3/4 cotter pins and 1 1/4 flat washers.

13. A) ENGINE DRIVE AUGERS ONLY - lower left hand side of drawing #2.
    a) MOTOR MOUNT #126 should be installed so the handle is toward the axle. Use 1/2 x 1 1/4 cap screws. Fasten BELT GUARD BRACKET #125 together with motor mount as per illustration.
    b) The 12" PULLEY #121 is mounted on the gearbox #74 with 1/4 x 1 1/4 key, so that the long end of hub is toward the gearbox and short end is approximately flush with gearbox shaft.
    c) Mount the LARGE BELT GUARD #119 over the 12" pulley and align end opening to the hanger.
    d) Mount SMALL BELT GUARD # 124 on bracket #125 as shown.
    e) Attach one end of LEVELLING ROD #118 to bracket (welded to auger tube below gearbox) using 1/2 x 1 1/2 cap screws & jam nuts. LEVELLING TUBE #116 fastens to hanger as per drawing.
    f) The quick release on the motor mount is used when starting the engine and to stop the auger without shutting off the engine.

    B) PTO DRIVE AUGERS ONLY - lower right hand side of drawing #2.
    a) Install PTO ARBOR ASSEMBLY #137 on hanger #7.
    b) Attach the 12" PULLEY #121 to the PTO arbor using 1/4 x 1/4 x 1 1/2 key and set screw.
    c) Mount the LARGE BELT GUARD #119 on the arbor ring.
    d) Mount the 6" PULLEY on gearbox so the pulley is approximately flush with gearbox shaft. Fasten with 1/4" key and set screws.
    e) Mount the belt(s) #122 on pulleys.
    f) Attach the LEVELLING ROD #118 to the undercarriage bracket (under the pivot ring on pulley side). Attach the LEVELLING TUBE #116 to the hanger using 1/2 x 1 1/2 cap screws and jam nuts. Use this levelling rod to adjust the belt tension.
    g) Mount the SMALL BELT GUARD #124 on the gearbox and adjust the alignment according to the belt(s).
    h) Attach the PTO SHAFT #62 to arbor shaft #138.
    i) Fasten PTO SHAFT CRADLE #97 onto the lift arms for transport position.

    C) DIRECT DRIVE AUGERS ONLY - drawing #1
    a) For 1983, all direct drive augers use the same coupler #56 as the engine drive and PTO drive augers. The shear pin unit is on the PTO shaft.
    NOTE: Shear pin for all augers is a 1/4" x 2" Grade 5 bolt. No other size or grade should be used.
    b) Bolt PTO HANGER #64 to welded bracket on extension.
    c) Attach PTO SHIELD #63 to gearbox.

14. Recheck and tighten all bolts. Of particular importance are:

CAUTION:
1) Cable clamps !!
2) Jam nuts on track roller assembly
3) Jam nuts on lift arms to undercarriage
4) Tie plate bolts
5) Gearbox mounting bolts
6) Auger tube flanges
7) Pulley set screws
8) All shields
9) Wheel bolts

15. Attach DRIVE LINE SHIELDS #30 starting at the top of auger. The last DRIVE LINE SHIELD #32 is bolted to the gearbox using 5/16 x 3/4 cap screw, lock washer and flat washer.

16. NOTE:
1) Gearbox is shipped without oil. Use 600 ml. of SAE 90.
2) Do not exceed 600 RPM flighting speed when operating auger.
3) An external chain tightener is supplied with 46' and 51' augers.

CAUTION

1) High Position: It is dangerous to move auger in raised position in vicinity of electrical lines.
2) Keep all shields and guards in place.
3) Turn off power when servicing or unpluging auger
4) Hitch pin clip must be securely in place when transporting auger.

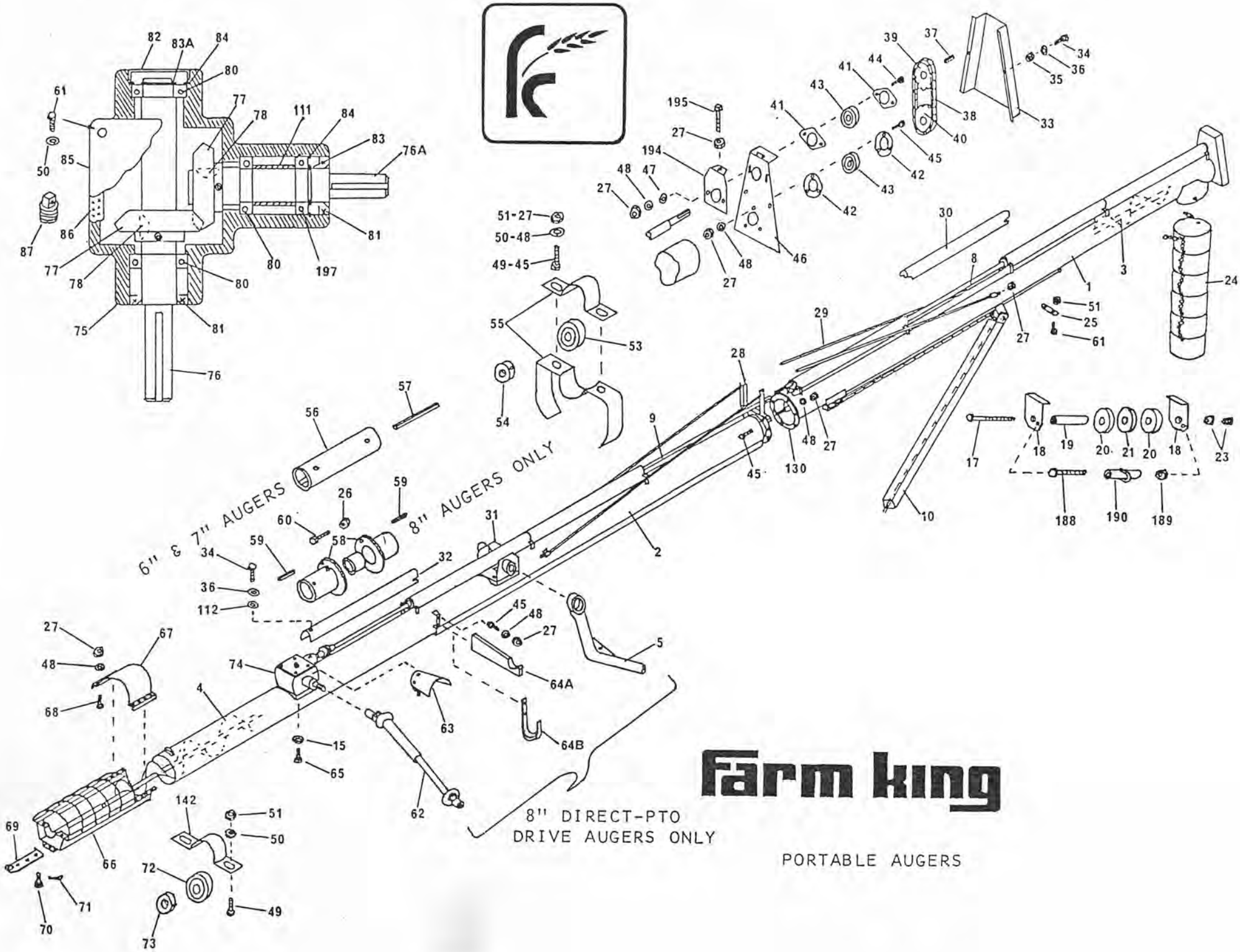
6" & 7" AUGERS
8" AUGERS ONLY
8" DIRECT-PTO
DRIVE AUGERS ONLY
Farm king
PORTABLE AUGERS

# Farm king

PORTABLE AUGERS

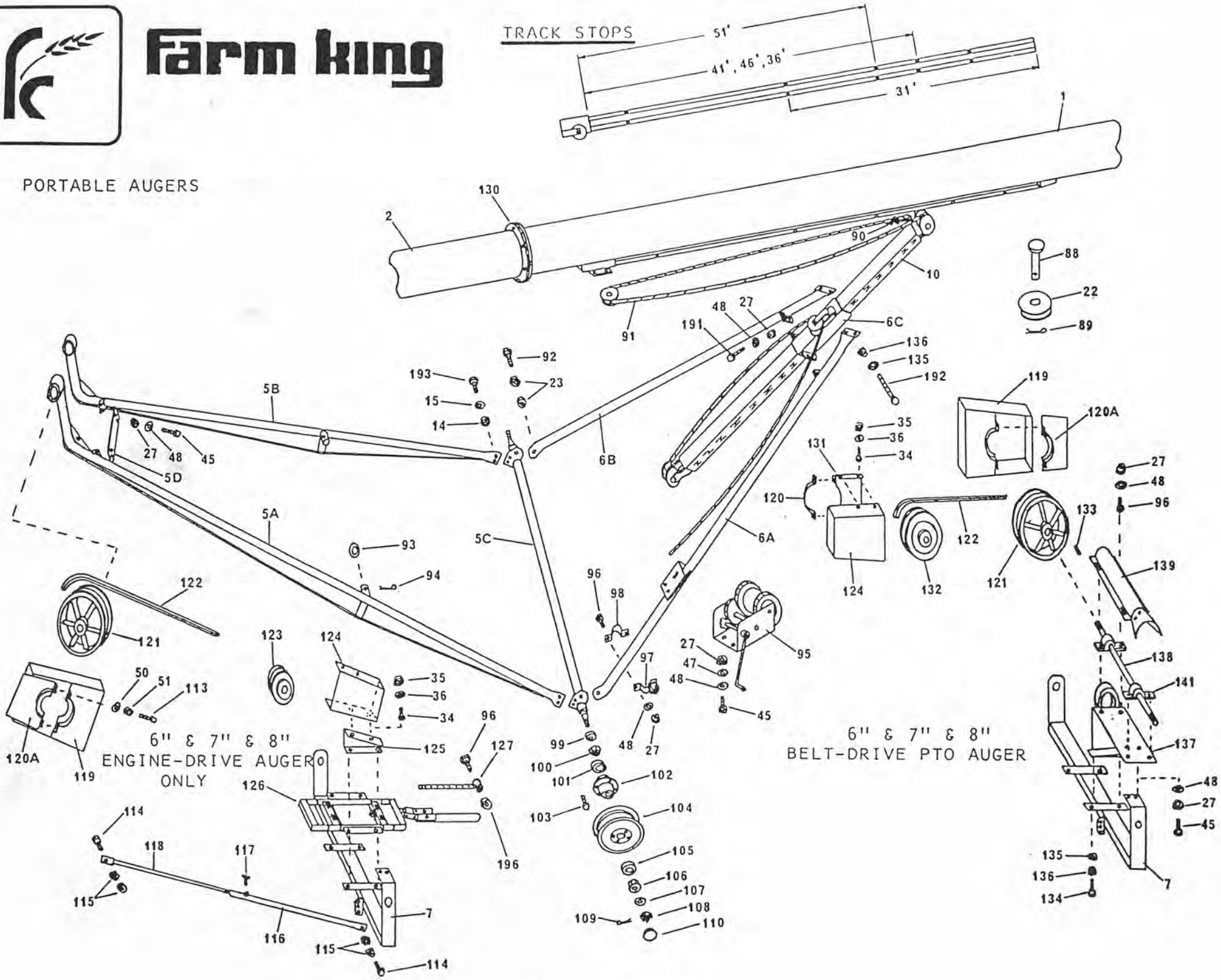

# AUGER PARTS LIST - 7" & 8"

| ITEM | PART NO. | DESCRIPTION |
|---|---|---|
| 1. | 961955 | Auger Tube, 7" X 22' Basic - 31', 36' & 41' |
| | 961956 | Auger Tube, 7" X 22' Basic - 46' & 51' |
| | 961803 | Auger Tube, 8" X 22' Basic - 41' Only |
| | 961804 | Auger Tube, 8" X 22' Basic - 46' & 51' |
| 2. | 961808 | Auger Tube, 7" X 9' Extension |
| | 961957 | Auger Tube, 7" X 14' Extension |
| | 961958 | Auger Tube, 7" X 19' Extension |
| | 961959 | Auger Tube, 7" X 24' Extension |
| | 961960 | Auger Tube, 7" X 29' Extension |
| | 961813 | Auger Tube, 8" X 19' Extension |
| | 961814 | Auger Tube, 8" X 24' Extension |
| | 961815 | Auger Tube, 8" X 29' Extension |
| 3. | 961961 | Auger Flighting, 7" X 22' Basic |
| | 961725 | Auger Flighting, 8" X 22' Basic |
| 4. | 961962 | Auger Flighting, 7" X 9' Extension |
| | 961963 | Auger Flighting, 7" X 14' Extension |
| | 961964 | Auger Flighting, 7" X 19' Extension |
| | 961965 | Auger Flighting, 7" X 24' Extension |
| | 961966 | Auger Flighting, 7" X 29' Extension |
| | 961726 | Auger Flighting, 8" X 19' Extension |
| | 961727 | Auger Flighting, 8" X 24' Extension |
| | 961728 | Auger Flighting, 8" X 29' Extension |
| 5.A | 961401 | 9' L.H. Undercarriage Arm - 7" X 31' Augers |
| | 961404 | 10'8" L.H. Undercarriage Arm - 7" X 36' Augers |
| | 961407 | 12'3" L.H. Undercarriage Arm - 7" X 41' Augers |
| | 961410 | 12'3" L.H. Undercarriage Arm - 8" X 41' Augers |
| | 961412 | 13' L.H. Undercarriage Arm - 7" & 8" X 46' Augers |
| | 961414 | 14'6" L.H. Undercarriage Arm - 7" & 8" X 51' Augers |
| 5.B | 961402 | 9' R.H. Undercarriage Arm - 7" X 31' Augers |
| | 961405 | 10'8" R.H. Undercarriage Arm - 7" X 36' Augers |
| | 961408 | 12'3" R.H. Undercarriage Arm - 7" X 41' Augers |
| | 961411 | 12'3" R.H. Undercarriage Arm - 8" X 41' Augers |
| | 961413 | 13' R.H. Undercarriage Arm - 7" X 8" X 46' Augers |
| | 961415 | 14'6" R.H. Undercarriage Arm - 7" & 8" X 51' Augers |
| 5.C | 961403 | 2" X 66" Axle Assembly - 7" X 31' Augers |
| | 961406 | 2" X 72" Axle Assembly - 7" X 36' Augers |
| | 961409 | 2" X 78" Axle Assembly - 7" X 41' Augers |
| | 961946 | 2 3/8" X 83" Axle Assembly - 8" X 41' Augers |
| | 961974 | 2 3/8" x 83" Axle Assembly - 7" & 8" X 46' Augers |
| | 961975 | 2 3/8" x 83" Axle Assembly - 7" & 8" X 51' Augers |
| 5.D | 961948 | Undercarriage Tie Plate |
| 6.A | 961416 | 6' Left Hand Lift Arm - 7" X 31' Augers |
| | 961418 | 7' Left Hand Lift Arm - 7" X 36' Augers |
| | 961420 | 8'8" Left Hand Lift Arm - 7" X 41' Augers |
| | 961422 | 8'8" Left Hand Lift Arm - 8" X 41' Augers |
| | 961424 | 10'4" Left Hand Lift Arm - 7" & 8" X 46' Augers |
| | 961427 | 12' Left Hand Lift Arm - 7" & 8" X 51' Augers |
| 6.B | 961417 | 6' Right Hand Lift Arm - 7" X 31' Augers |
| | 961419 | 7' Right Hand Lift Arm - 7" X 36' Augers |
| | 961421 | 8'8" Right Hand Lift Arm - 7" X 41' Augers |
| | 961423 | 8'8" Right Hand Lift Arm - 8" X 41' Augers |
| | 961425 | 10'4" Right Hand Lift Arm - 7" & 8" X 46' Augers |
| | 961428 | 12' Right Hand Lift Arm - 7" & 8" X 51' Augers |
| 6.C | 961949 | 12" Lift Arm Center Sleeve - 7" X 31' & 36' Augers |
| | 961426 | 15" Lift Arm Center Sleeve - 7" & 8" X 46' Augers |
| | 961429 | 18" Lift Arm Center Sleeve - 7" & 8" X 51' Augers |
| | 961438 | 12" Lift Arm Center Sleeve - 7" & 8" X 41' |

AUGER PARTS LIST - 7" & 8" - CONTINUED

| ITEM | PART NO. | DESCRIPTION |
|---|---|---|
| 7. | 961829 | 36 1/2" Motor Mount Hanger - 31' & 36' Augers |
| | 961830 | 44" Motor Mount Hanger - 41' & 46' Augers |
| | 961831 | 51" Motor Mount Hanger - 51' Augers |
| 8. | 961732 | Basic Drive Line - 7" & 8" Augers |
| 9. | 961967 | Extension Drive Line - 7" X 31' Augers (5 1/2") |
| | 961968 | Extension Drive Line - 7" X 36' Augers (62 3/4") |
| | 961836 | Extension Drive Line - 8" X 41' D.D. Augers (148 1/2") |
| | 961837 | Extension Drive Line - 8" X 46' D.D. Augers (212") |
| | 961838 | Extension Drive Line - 8" X 51' D.D. Augers (272") |
| | 961839 | Extension Drive Line - 7" X 41'& 8" X 41' B.D. P.A. (101 1/2") |
| | 961840 | Extension Drive Line - 7" X 46'& 8" X 46' B.D. P.A. (130 1/4") |
| | 961841 | Extension Drive Line - 7" X 51'& 8" X 51' B.D. P.A. (173 1/4") |
| 10. | 961765 | 5' Telescoping Tube - 7" X 31' Augers |
| | 961766 | 6' Telescoping Tube - 7" X 36' Augers |
| | 961767 | 7' Telescoping Tube - 7" & 8" X 41' Augers |
| | 961768 | 8' Telescoping Tube - 7" & 8" X 46' Augers |
| | 961769 | 10' Telescoping Tube - 7" & 8" X 51' Augers |
| 13. | | 7/16" X 3 1/2" Plated Cap Screw - 7" Augers |
| | | 7/16" X 4" Plated Cap Screw - 8" Augers |
| 14. | | 7/16" Plated Hex Nut |
| 15. | | 7/16" Plated Lockwasher |
| 16. | | 7/16" Flatwasher |
| 17. | | 5/8" X 5 1/2" Hex Head Bolt |
| 18. | 961573 | Left Side Plate - '79 & Up |
| | 961574 | Right Side Plate - '79 & Up |
| 19. | 961624 | Roller Assembly Spacer |
| 20. | 961844 | Track Roller |
| 21. | 961845 | Cable Pulley, 1" Bore |
| 22. | 961846 | Cable Pulley, 1/2" Bore |
| 23. | | 5/8" Jam Nut |
| 24. | | 7" Flex Spout |
| | | 8" Flex Spout |
| 25. | 961770 | Track Stop |
| 26. | | 5/16" Lock Nut - '79 & Up |
| 27. | | 3/8" Hex Nut |
| 28. | 961751 | Bridging Rod Mounting Bracket (7" & 8" X 46' & 51') (Right) |
| | 961752 | Bridging Rod Mounting Bracket (7" & 8" X 46' & 51') (Left) |
| 29. | 961786 | Bridging Rod (7" & 8" X 46' & 51') |
| 30. | 961848 | 66" Drive Line Shield - 7" & 8" Augers |
| 31. | 961787 | Dummy Mounting Box - 8" Direct Drive Only |
| 32. | 961969 | Extension Shield - 7" X 31' Augers |
| | 961970 | Extension Shield - 7" X 36' Augers |
| | 961854 | Extension Shield - 8" X 41' D.D. Augers |
| | 961855 | Extension Shield - 7" X 41' & 8" X 41' B.D. Augers |
| | 961856 | Extension Shield - 8" X 46' D.D. Augers |
| | 961857 | Extension Shield - 7" X 46' & 8" X 46' B.D. |
| | 961858 | Extension Shield - 8" X 51' D.D. Augers |
| | 961859 | Extension Shield - 7" X 51' & 8" X 51' B.D. Augers |
| 33. | 961644 | Chain Guard - 7" & 8" Augers |
| 34. | | 1/4" x 3/4" Cap Screw |
| 35. | | 1/4" Hex Nut |
| 36. | | 1/4" Lockwasher |
| 37. | | 1/4" X 1 1/4" Key |
| 38. | 961860 | #60 Roller Chain, 40 1/2L - 7" Augers |
| | 961953 | #60 Roller Chain, 36 L - 8" Augers (Two - 15 T Sprockets) |
| | 961954 | #60 Roller Chain, 42 1/2L - 8" Augers (One 15T & One 28T Sprocket) |

## AUGER PARTS LIST - 7" & 8" - CONTINUED

| ITEM | PART NO. | DESCRIPTION |
|---|---|---|
| 39. | 961684 | 15 Tooth Sprocket, #60, 1 1/4" Bore - 7" & 8" Augers |
| 40. | 961684 | 15 Tooth Sprocket, #60, 1 1/4" Bore - 8" D.D. Augers |
| | 961686 | 28 Tooth Sprocket, #60, 1 1/4" Bore - 7" & 8" B.D. Augers |
| 41. | 961742 | Top Bearing Retainer/Pair - 7" & 8" Augers |
| 42. | 961675 | Bottom Bearing Retainer/Pair - 7" & 8" Augers |
| 43. | 961676 | 1 1/4" Bearing - 7" & 8" Augers |
| 44. | | 3/8" x 1" Carriage Bolt |
| 45. | | 3/8" x 1" Cap Screw |
| 46. | 961741 | Auger End Plate - 7" X 31',36', 7" & 8" X 41' |
| | 961971 | Auger End Plate - 7" & 8" X 46' & 51' |
| 47. | | 3/8" Flatwasher |
| 48. | | 3/8" Lockwasher |
| 49. | | 5/16" x 3/4" Cap Screw |
| 50. | | 5/16" Lockwasher |
| 51. | | 5/16" Hex Nut |
| 53. | 965818 | 1 1/4" Bearing (206) - 7" & 8" Augers |
| 54. | | 1 1/4" Bearing Collar |
| 55. | 961430 | Bearing Holder 7" & 8" Augers |
| | 961432 | Bearing Holder Cap - 7" & 8" Augers |
| 56. | 961611 | Drive Shaft Coupling With Set Screws |
| 57. | | 1/4" x 3 1/2" Key |
| 61. | | 5/16" x 3/4" Cap Screw |
| 62. | F0053 | Universal PTO Shaft |
| 63. | 961868 | PTO Guard - 8" Direct Drive Only |
| 64.A | 961790 | PTO Holder - 8" X 41' & 46' Direct Drive Only |
| 64.B | 961791 | PTO Holder - 8" X 51' Direct Drive |
| 65. | | 7/16" x 3/4" Plated Cap Screw |
| 66. | 961870 | Intake Guard - 7" Augers |
| | 961871 | Intake Guard - 8" Augers |
| 67. | 961873 | Intake Guard Clamp - 7" Augers |
| | 961874 | Intake Guard Clamp - 8" Augers |
| 68. | | 3/8" x 1 3/4" Cap Screw |
| 69. | 961875 | Hitch Clevis |
| 70. | 961876 | 1/2" X 1" Clevis Pin |
| 71. | 961877 | Spring Clip |
| 72. | 961627 | Bearing - 7" & 8" Augers |
| 73. | | 1" Bearing Collar |
| 74. | 961878 | Gearbox Assembly |
| 75. | 961879 | Gearbox Casting Only |
| 76. | 961880 | Gearbox Cross Shaft |
| 76.A | 961881 | Pinion Shaft |
| 77. | 961882 | Bevel Gear - 1 1/4" Bore |
| 78. | | Woodruff Key |
| 79. | | Roll Pin - 1/4" x 2" (On Earlier Models Only) |
| 80. | 961572 | 30MM Bearing |
| 81. | 961619 | Oil Seal |
| 82. | 961883 | Dust Cap |
| 83. | 961884 | Small Snap Ring |
| 83.A | 961941 | Small Snap Ring -'79 |
| 84. | 961885 | Large Snap Ring |

## AUGER PARTS LIST - 7" & 8" - CONTINUED

| ITEM | PART NO. | DESCRIPTION |
|---|---|---|
| 85. | 961886 | Gearbox Cover |
| 86. | 961887 | Gearbox Cover Gasket |
| 87. | FBU500167-1 | Gearbox Vent Plug |
| 88. | | 1/2" X 2" Clevis Pin |
| 89. | | 1/8" X 1" Collar Pin |
| 90. | 961658 | 1/4" Cable Clamp - 7" Augers |
| | 961763 | 5/16" Cable Clamp - 7" X 51' & All 8" Augers |
| 91. | 961756 | Cable - 7" X 31' Augers |
| | 961757 | Cable - 7" X 36' Augers |
| | 961758 | Cable - 7" X 41' Augers |
| | 961760 | Cable - 8" X 41' Augers |
| | 961761 | Cable - 7" & 8" X 46' Augers |
| | 961762 | Cable - 7" & 8" x 51' Augers |
| 92. | | 5/8" x 2" Plated Cap Screws |
| 93. | | 1 1/4" Flatwasher |
| 94. | | 1/4" X 1 3/4" Cotter Pin |
| 95. | 961888 | Winch Assembly - 7" X 31', 36', 41' & 46' Augers |
| | 961945 | Winch Assembly - 7" X 51' & All 8" Augers - '79 & Up |
| 96. | | 3/8" x 2" Cap Screws |
| 97. | 961889 | PTO Holder - 7" & 8" Belt Drive PTO Augers |
| 98. | 961890 | PTO Holder Clamp |
| 99. | 961891 | Oil Seal |
| 100. | 967712 | Inner Bearing Cone |
| 101. | 967711 | Inner Bearing Cup |
| 102. | F105173 | Hub Complete With Bearing Cups - 4 Bolt |
| 103. | 968404 | 1/2" Wheel Bolt |
| 104. | 961750 | 15" X 4.5" X 4 Bolt Wheel |
| 105. | 968405 | Outer Bearing Cup |
| 106. | 968406 | Outer Bearing Cone |
| 107. | | Washer |
| 108. | 968407 | 3/4" Slotted Hex Nut |
| 109. | | 1/8" X 1 1/2" Cotter Pin |
| 110. | 968409 | Dust Cap |
| 111. | 961892 | Bearing Spacer |
| 112. | | 1/4" Flatwasher |
| 113. | | 5/16" X 1 1/4" Cap Screw |
| 114. | | 1/2" X 2" Plated Cap Screw |
| 115. | | 1/2" Jam Nut |
| 116. | 961645 | Motor Mount Levelling Tube (All 7" & 8") |
| 117. | 961647 | Levelling Tube Screw |
| 118. | 961646 | Motor Mount Levelling Rod, 34" - 31' & 36' Augers |
| | 961893 | Motor Mount Levelling Rod, 60" - 41' & 46' Augers |
| | 961894 | Motor Mount Levelling Rod, 80" - 51' Augers |
| 119. | 961895 | 12" Pulley Guard |
| 120. | 961896 | Pulley Guard Clamp (6") |
| 120.A | 961440 | 12" Pulley Guard Clamp |
| 121. | 961606 | 12" Single Pulley, 1" Bore - 7" X 31' Augers |
| | 961567 | 12" Double Pulley, 1" Bore |
| 122. | 961771 | B-158 Belt - 31' & 36' Augers |
| | 961897 | B-199 Belt - 41' & 46' Augers |
| | 961898 | B-255 Belt - 51' Augers |
| 123. | 961793 | 3 1/2" Single Pulley, 1" Bore - 7" X 31' Augers |
| | 961899 | 3" Double Pulley, 1" Bore (See Whole Goods List) |
| 124. | 961900 | 6" Pulley Guard |

## AUGER PARTS LIST - 7" & 8" - CONTINUED

| ITEM | PART NO. | DESCRIPTION |
|---|---|---|
| 125. | 961901 | Guard Mounting Bracket |
| 126. | 961972 | Motor Mount Complete |
| 127. | 961973 | Motor Mount Adjusting Bolt |
| 128. | | 3/4" Flatwasher |
| 129. | | 3/16" X 1 1/4" Cotter Pin |
| 130. | 961558 | 7" Connecting Ring |
| | 961559 | 8" Connecting Ring |
| 131. | 961902 | 6" Pulley Guard Insert - Belt Drive PTO |
| 132. | 961794 | 6" Double Pulley, 1" Bore |
| 133. | | 1/4" X 2" Key |
| 134. | | 1/2" X 1 1/2" Plated Cap Screw |
| 135. | | 1/2" Plated Lockwasher |
| 136. | | 1/2" Plated Hex Nut |
| 137. | 961903 | PTO Mounting Plate - 31' & 36' Augers |
| | 961904 | PTO Mounting Plate - 41' & 46' Augers |
| | 961905 | PTO Mounting Plate - 51' Augers |
| 138. | 961906 | 14" Arbor Shaft - 31' & 36' Augers |
| | 961907 | 19" Arbor Shaft - 41' & 46' Augers |
| | 961908 | 23" Arbor Shaft - 51' Augers |
| 139. | 961909 | Arbor Shield - 31' & 36' Augers |
| | 961910 | Arbor Shield - 41' & 46' Augers |
| | 961911 | Arbor Shield - 51' Augers |
| 141. | 961792 | 1" Pillow Bearing |
| 142. | 961913 | 1" Bearing Holder Cap |
| 188. | 961942 | 1/2" X 4 1/2" Cap Screw (Plated) |
| 189. | F81966 | 1/2" Lock Nut |
| 190. | 961944 | Cable Anchor |
| 191. | | 3/8" X 1 1/4" Cap Screw (Plated) |
| 192. | | 1/2" X 5" Cap Screw (Plated) |
| 193. | | 7/16" X 1 1/4" Cap Screw (Plated) |
| 194. | 961952 | Chain Tightener - 7" & 8" X 46' & 51' Augers |
| 195. | 961951 | 3/8" X 2" Sq. Hd. Set Screw |
| 196. | | 3/8" Lock Nut |
| 197. | 961652 | 30MM Sealed Bearing |

*SPECIAL OPEN END INTAKES C/W CLAMP:

7" INTAKE

8" INTAKE

## NO. K1550 PARTS LIST - 1984 & UP

### 961888 - 7" & 8" X 31' AUGERS

| ITEM NO. | PART NAME | | PART NO. |
|---|---|---|---|
| 1. | HANDLE ASSEMBLY | | 2461S01 |
| 2. | CABLE CLAMP | CABLE KEEPER KIT | 5621S01 |
| 3. | LOCKWASHER & NUT | | |
| 4. | CARRIAGE BOLT | | |
| 5. | 5/16" LOCK NUT | RATCHET KIT | 6730S00 |
| 6. | RATCHET SPACER | | |
| 7. | RATCHET SPRING | | |
| 8. | RATCHET PAWL | | |
| 9. | SHOULDER BOLT | | |
| 11. | BRAKE DISC KIT | | 1558S00 |
| 12. | INPUT SHAFT | INPUT SHAFT KIT | 1563S01 |
| 13. | 1/2" LOCK NUT | | |
| 14. | SPACER | | |
| 15. | BUSHING | | |
| 16. | SHAFT BRAKE DISC | | |
| 17. | RATCHET GEAR | | |
| 18. | PINION & DISC ASSEMBLY | | |
| 19. | 1/2" LOCK NUT | | * |
| 20. | DRUM ASSEMBLY | | * |
| 21. | FRAME | | * |
| 22. | 1/2" X 5 3/4" CAP SCREW | | * |
| 23. | DRUM SPACER | | * |
| 24. | 3/8" X 5 3/4" CAP SCREW | | * |
| 25. | FRAME SPACER | | * |
| 26. | 3/8" LOCK NUT | | * |

* NOT AVAILABLE

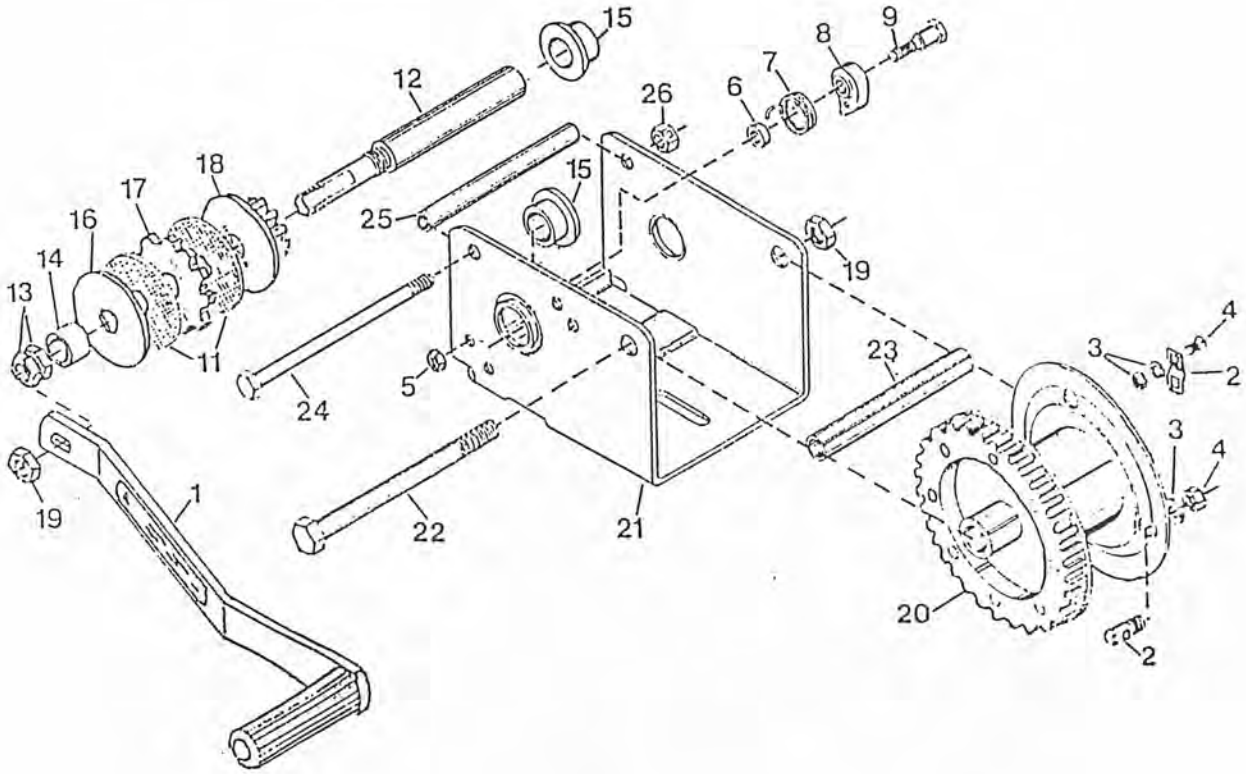

# NO. K2550 PARTS LIST

## 961945 - ALL 8" AUGERS & 7" X 51' AUGERS - 1984 & UP

| ITEM | PART NAME | | PART NO. |
|---|---|---|---|
| 1. | HANDLE | | 2461S01 |
| 4. | BOLT | CABLE KEEPER KIT | 5621S01 |
| 5. | CABLE CLAMP | | |
| 6. | LOCKWASHER | | |
| 7. | NUT | | |
| 8. | INPUT SHAFT | INPUT SHAFT KIT | 1565S01 |
| 9. | RETAINING RING | | |
| 10. | BRAKE DISC | | |
| 11. | RATCHET GEAR | | |
| 12. | PINION GEAR | | |
| 13. | BUSHING | | |
| 14. | INSERT | | |
| 15. | SPACER | | |
| 16. | NUT | | |
| 17. | FRICTION DISC | | 1578S00 |
| 18. | BUSHING | INTERMEDIATE SHAFT KIT | 1569S01 |
| 19. | INSERT | | |
| 20. | INSERT | | |
| 21. | BUSHING | | |
| 22. | WASHER | | |
| 23. | INTERMEDIATE SHAFT | | |
| 24. | ROLL PIN | | |
| 25. | WOODRUFF KEY | | |
| 26. | GEAR | | |
| 27. | NUT | RATCHET KIT | 6730S00 |
| 28. | SPACER | | |
| 29. | RATCHET PAWL | | |
| 30. | SPRING | | |
| 31. | SHOULDER BOLT | | |
| 42. | DRUM BOLT | | * |
| 43. | LOCK NUT | | * |
| 44. | DRUM SPACER | | * |
| 45. | DRUM ASSEMBLY | | * |
| 46. | LOCK NUT | | * |
| 47. | FRAME SPACER | | * |
| 48. | BOLT | | * |
| 49. | FRAME | | * |

* NOT AVAILABLE

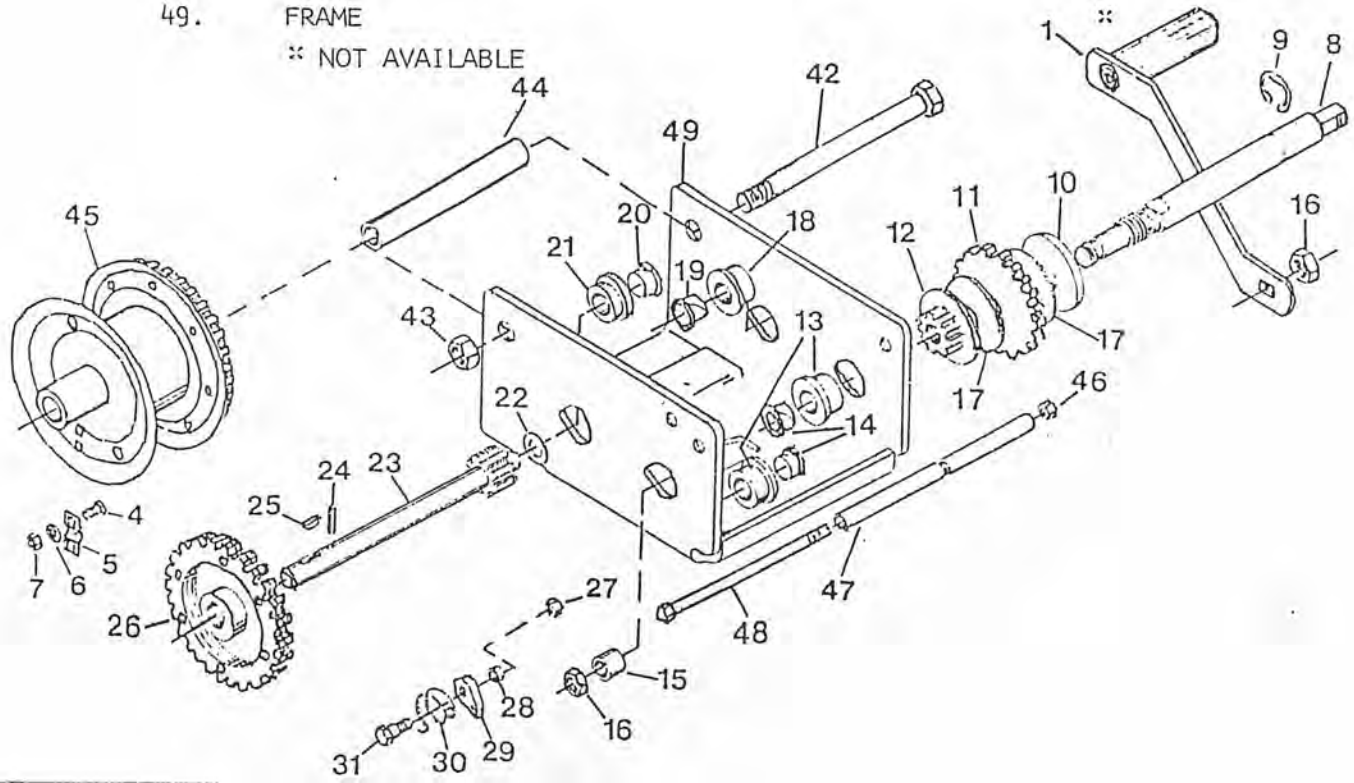

# INSTRUCTIONS FOR CONVERSION OF 8" DIRECT DRIVE TO BELT DRIVE PTO

1. a) Remove extension drive line no. 9 and extension drive line shields no. 30 and 32. Mount the shorter belt drive line.

   b) The dummy mounting box no. 31 is removed and the gearbox no. 74 is installed on this mounting plate using 7/16" x 3/4" capscrews.

   c) Fasten undercarriage no. 5 to gearbox.

2. Attach coupler no. 56 to extension drive line no. 9 using 1/4 x 1/4 x 3 1/2 key and 3/8 x 3/8 socket set screw.

   NOTE: Shear pin unit not required for belt drive augers.

3. Replace the lower 15 tooth sprocket no. 40 in the top drive unit with a 28 tooth sprocket supplied in kit.

4. a) Install PTO arbor assembly no. 137 onto hanger no. 7.

   b) Attach the 12" pulley no. 121 onto the PTO arbor using 1/4 x 1/4 x 1 1/2 key and set screws.

   c) Mount the large belt guard no. 119 on the arbor ring.

   d) Mount the 6" pulley no. 132 on gearbox so that the pulley is approximately flush with the gearbox shaft. Fasten with key and set screws.

   e) Mount the belts no. 122.

   f) Attach the leveling rod no. 118 to the undercarriage bracket (at the bend) and to the hanger, using 1/2 x 1 1/2 cap screws and jam nuts. Use this rod to adjust the belt tension.

   g) Mount the small belt guard no. 124 on the gearbox and adjust the alignment according to belt.

   h) Attach PTO shaft no. 62.

   i) Fasten PTO shaft cradle no. 97 onto the lift arms for transport position.

5. Recheck and tighten all bolts.

6. Attach drive line shields no. 30 and 32.

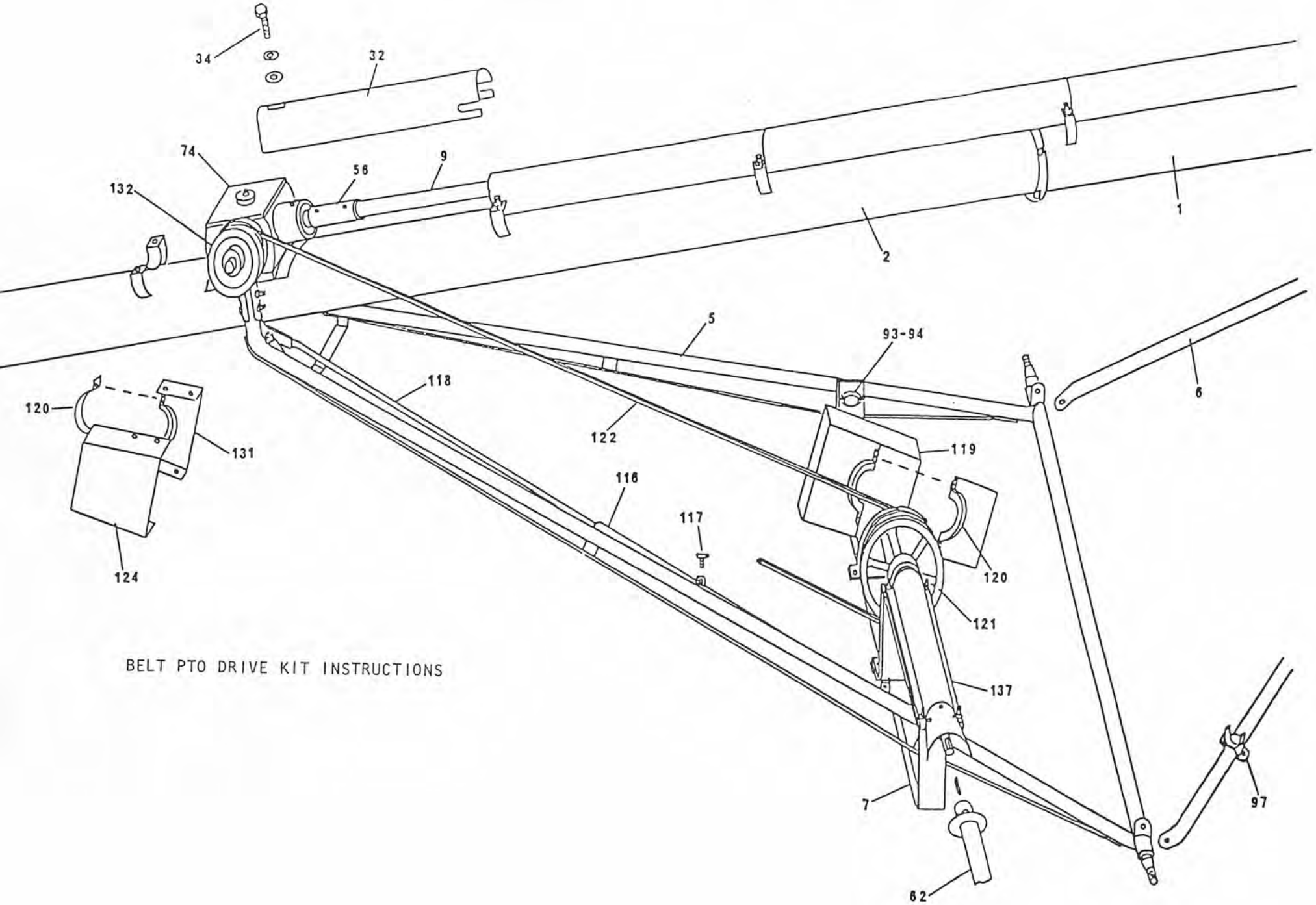


BELT PTO DRIVE KIT INSTRUCTIONS

# 7" & 8" P.A. PTO - 1988

| ITEM | PART NO. | DESCRIPTION |
|---|---|---|
| | F0053 | SHAFT COMPLETE |
| | 936148 | TRACTOR HALF OF PTO |
| | 936149 | IMPLEMENT HALF OF PTO |
| | 936164 | SHEAR ASSEMBLY (#'S 9-14 INCLUSIVE) |
| 1. | 936073 | ROUND HOLE YOKE |
| 2. | 936165 | YOKE & TUBE ASSEMBLY |
| 3. | 936075 | YOKE & BAR ASSEMBLY |
| 4. | 936152 | INNER SHIELD |
| 5. | 936153 | OUTER SHIELD |
| 6. | 936111 | SHIELD BEARING KIT (2 PCS.) |
| 7. | 936124 | SHIELD BEARING (1 PC.) |
| 8. | 936079 | REPAIR KIT |
| 9. | 936154 | SHEAR YOKE |
| 10. | 936155 | SHEAR YOKE HUB |
| 11. | 936115 | STEEL BALL (25/SET) |
| 12. | 936116 | GREASE FITTING |
| 13. | | SHEAR BOLT - 1/4" X 2 1/4" (GRADE 5) |
| 14. | | 1/4" LOCK NUT |

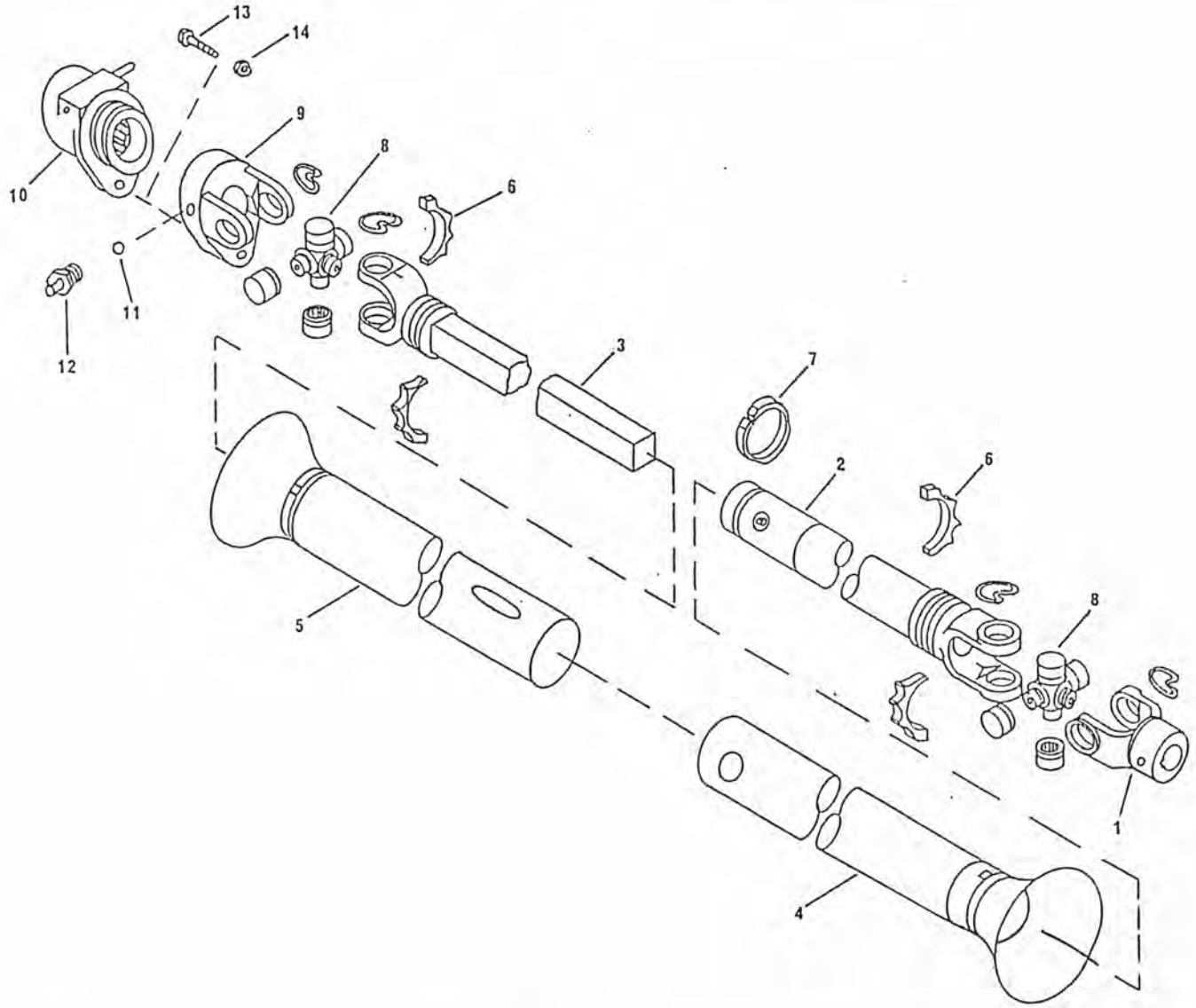

## KITS AVAILABLE

| | |
|---|---|
| F0050 | GAS, ELECTRIC ENGINE DRIVE |
| F0053 | 25 H.P. SAFETY P.T.O. SHAFT |
| F7063 | BELT P.T.O. KIT FOR 31' & 36' AUGER |
| F7064 | BELT P.T.O. KIT FOR 41' & 46' AUGER |
| F7065 | BELT P.T.O. KIT FOR 51' AUGER |

NOTE: CONVERSION KITS

IN ORDER TO CONVERT 8" DIRECT DRIVE AUGERS TO BELT DRIVE YOU NEED ONE OF THE FOLLOWING KITS:

| | |
|---|---|
| Y7066 | CONVERSION KIT FOR 8" x 41' DIRECT DRIVE |
| Y7067 | CONVERSION KIT FOR 8" x 46' DIRECT DRIVE |
| Y7068 | CONVERSION KIT FOR 8" x 51' DIRECT DRIVE |

NOTE: WE DO NOT RECOMMEND THE 8" x 51' BELT DRIVE AUGER.

## ACCESSORIES AVAILABLE

7" FLEX SPOUT

8" FLEX SPOUT

BATTERY BOX

# SHIPPING BUNDLES

## FARM KING PORTABLE AUGERS

SIZE: 7" X 31' SINGLE BELT DRIVE AUGER

| QUANTITY REQUIRED | BUNDLE NUMBER | DESCRIPTION |
|---|---|---|
| 1 ONLY | F5006 | BASIC AUGER, 7" X 22' (31', 36' & 41') |
| 1 ONLY | F8001 | EXTENSION AUGER, 7" X 9' |
| 1 ONLY | F8020 | UNDERCARRIAGE, 2" X 9' |
| 1 ONLY | F8030 | LIFT ARMS, 2" X 6' |
| 1 ONLY | F8039 | CRATE OF PARTS, 7" X 31' |
| 1 ONLY | F0050 | MOTOR MOUNT |
| 1 ONLY | F7051 | HANGER AND LEVELLING ROD, 36 1/2" |
| 1 ONLY | F7071 | INTAKE ASSEMBLY, 7" X 26" |
| 1 ONLY | F7101 | DRIVE LINE SHIELDS |
| 2 ONLY | F7110 | 15" X 4.5" X 4 BOLT WHEELS |

SIZE: 7" X 36' DOUBLE BELT DRIVE AUGER

| QUANTITY REQUIRED | BUNDLE NUMBER | DESCRIPTION |
|---|---|---|
| 1 ONLY | F5006 | BASIC AUGER, 7" X 22' (31', 36' & 41') |
| 1 ONLY | F8002 | EXTENSION AUGER, 7" X 14' |
| 1 ONLY | F8021 | UNDERCARRIAGE, 2" X 10'8" |
| 1 ONLY | F8031 | LIFT ARMS, 2" X 7' |
| 1 ONLY | F8042 | CRATE OF PARTS, 7" X 36' |
| 1 ONLY | F0050 | MOTOR MOUNT |
| 1 ONLY | F7051 | HANGER AND LEVELLING ROD, 36 1/2" |
| 1 ONLY | F7071 | INTAKE ASSEMBLY, 7" X 26" |
| 1 ONLY | F7102 | DRIVE LINE SHIELDS |
| 2 ONLY | F7110 | 15" X 4.5" X 4 BOLT WHEELS |

SIZE: 7" X 41' DOUBLE BELT DRIVE AUGER

| QUANTITY REQUIRED | BUNDLE NUMBER | DESCRIPTION |
|---|---|---|
| 1 ONLY | F5006 | BASIC AUGER, 7" X 22' (31', 36' & 41') |
| 1 ONLY | F8003 | EXTENSION AUGER, 7" X 19' |
| 1 ONLY | F8026 | UNDERCARRIAGE, 2" X 12'3" |
| 1 ONLY | F8032 | LIFT ARMS, 2" X 8'8" |
| 1 ONLY | F8043 | CRATE OF PARTS, 7" X 41' |
| 1 ONLY | F0050 | MOTOR MOUNT |
| 1 ONLY | F7052 | HANGER AND LEVELLING ROD, 44" |
| 1 ONLY | F7071 | INTAKE ASSEMBLY, 7" X 26" |
| 1 ONLY | F7095 | DRIVE LINE SHIELDS |
| 2 ONLY | F7110 | 15" X 4.5" X 4 BOLT WHEELS |

SHIPPING BUNDLES

FARM KING PORTABLE AUGERS

SIZE: 7" X 46' BELT-DRIVE PTO AUGER

| QUANTITY REQUIRED | BUNDLE NUMBER | DESCRIPTION |
|---|---|---|
| 1 ONLY | F 7001 | BASIC AUGER, 7" X 22' (46' & 51') |
| 1 ONLY | F 8004 | EXTENSION AUGER, 7" X 24' |
| 1 ONLY | F 8024 | UNDERCARRIAGE, 2 3/8" X 13' |
| 1 ONLY | F 8034 | LIFT ARMS, 2 1/2" X 10'4" |
| 1 ONLY | F 8044 | CRATE OF PARTS, 7" X 46' |
| 1 ONLY | F 0053 | PTO SHAFT |
| 1 ONLY | F 7052 | HANGER AND LEVELLING ROD, 44" |
| 1 ONLY | F 7064 | BELT-DRIVE PTO KIT, 41' & 46' |
| 1 ONLY | F 7071 | INTAKE ASSEMBLY, 7" X 26" |
| 1 ONLY | F 7096 | DRIVE LINE SHIELDS |
| 2 ONLY | F 7110 | 15" X 4.5" X 4 BOLT WHEELS |

SIZE: 7" X 51' BELT-DRIVE PTO AUGER

| QUANTITY REQUIRED | BUNDLE NUMBER | DESCRIPTION |
|---|---|---|
| 1 ONLY | F 7001 | BASIC AUGER, 7" X 22' (46' & 51') |
| 1 ONLY | F 8005 | EXTENSION AUGER, 7" X 29' |
| 1 ONLY | F 8025 | UNDERCARRIAGE, 2 3/8" X 14'6" |
| 1 ONLY | F 8035 | LIFT ARMS, 2 1/2" X 12' |
| 1 ONLY | F 8045 | CRATE OF PARTS, 7" X 51' |
| 1 ONLY | F 0053 | PTO SHAFT |
| 1 ONLY | F 7053 | HANGER AND LEVELLING ROD, 51' (51"L.) |
| 1 ONLY | F 7065 | BELT-DRIVE PTO KIT, 51' |
| 1 ONLY | F 7071 | INTAKE ASSEMBLY, 7" X 26" |
| 1 ONLY | F 7097 | DRIVE LINE SHIELDS |
| 2 ONLY | F 7110 | 15" X 4.5" X 4 BOLT WHEELS |

SHIPPING BUNDLES

FARM KING PORTABLE AUGERS

SIZE: 7" x 31' BELT-DRIVE AUGER

| QUANTITY REQUIRED | BUNDLE NUMBER | DESCRIPTION |
|---|---|---|
| 1 ONLY | F 5006 | BASIC AUGER, 7" X 22' (31', 36' & 41') |
| 1 ONLY | F 8001 | EXTENSION AUGER, 7" X 9' |
| 1 ONLY | F 8020 | UNDERCARRIAGE, 2" X 9' |
| 1 ONLY | F 8030 | LIFT ARMS, 2" X 6' |
| 1 ONLY | F 8039 | CRATE OF PARTS, 7" X 31' |
| 1 ONLY | F 0053 | PTO SHAFT |
| 1 ONLY | F 7051 | HANGER AND LEVELLING ROD, 36 1/2" |
| 1 ONLY | F 7063 | BELT-DRIVE PTO KIT, 31' & 36' |
| 1 ONLY | F 7071 | INTAKE ASSEMBLY, 7" X 26" |
| 1 ONLY | F 7101 | DRIVE LINE SHIELDS |
| 2 ONLY | F 7110 | 15" X 4.5" x 4 BOLT WHEELS |

SIZE: 7" X 36' BELT-DRIVE PTO AUGER

| QUANTITY REQUIRED | BUNDLE NUMBER | DESCRIPTION |
|---|---|---|
| 1 ONLY | F 5006 | BASIC AUGER, 7" X 22' (31', 36' & 41') |
| 1 ONLY | F 8002 | EXTENSION AUGER, 7" X 14' |
| 1 ONLY | F 8021 | UNDERCARRIAGE, 2" X 10'8" |
| 1 ONLY | F 8031 | LIFT ARMS, 2" X 7' |
| 1 ONLY | F 8042 | CRATE OF PARTS, 7" X 36' |
| 1 ONLY | F 0053 | PTO SHAFT |
| 1 ONLY | F 7063 | BELT-DRIVE PTO KIT, 31' & 36' |
| 1 ONLY | F 7051 | HANGER AND LEVELLING ROD, 36 1/2" |
| 1 ONLY | F 7071 | INTAKE ASSEMBLY, 7" X 26' |
| 1 ONLY | F 7102 | DRIVE LINE SHIELDS |
| 2 ONLY | F 7110 | 15" X 4.5" X 4 BOLT WHEELS |

SIZE: 7" x 41' BELT-DRIVE PTO AUGER

| QUANTITY REQUIRED | BUNDLE NUMBER | DESCRIPTION |
|---|---|---|
| 1 ONLY | F 5006 | BASIC AUGER, 7" X 22' (31', 36' & 41') |
| 1 ONLY | F 8003 | EXTENSION AUGER, 7" X 19' |
| 1 ONLY | F 8026 | UNDERCARRIAGE, 2" X 12'3" |
| 1 ONLY | F 8032 | LIFT ARMS, 2" X 8'8" |
| 1 ONLY | F 8043 | CRATE OF PARTS, 7" X 41' |
| 1 ONLY | F 0053 | PTO SHAFT |
| 1 ONLY | F 7052 | HANGER AND LEVELLING ROD, 44" |
| 1 ONLY | F 7064 | BELT-DRIVE PTO KIT, 41' & 46' |
| 1 ONLY | F 7071 | INTAKE ASSEMBLY, 7" X 26" |
| 1 ONLY | F 7095 | DRIVE LINE SHIELDS |
| 2 ONLY | F 7110 | 15" X 4.5" X 4 BOLT WHEELS |

# SHIPPING BUNDLES

## FARM KING PORTABLE AUGERS

SIZE: 7" X 46' DOUBLE BELT DRIVE AUGER

| QUANTITY REQUIRED | BUNDLE NUMBER | DESCRIPTION |
|---|---|---|
| 1 ONLY | F 7001 | BASIC AUGER, 7" X 22' (46' & 51') |
| 1 ONLY | F 8004 | EXTENSION AUGER, 7" X 24' |
| 1 ONLY | F 8024 | UNDERCARRIAGE, 2 3/8" X 13' |
| 1 ONLY | F 8034 | LIFT ARMS, 2 1/2" X 10'4" |
| 1 ONLY | F 8044 | CRATE OF PARTS, 7" X 46' |
| 1 ONLY | F 0050 | MOTOR MOUNT |
| 1 ONLY | F 7052 | HANGER AND LEVELLING ROD, 44" |
| 1 ONLY | F 7071 | INTAKE ASSEMBLY, 7" X 26" |
| 1 ONLY | F 7096 | DRIVE LINE SHIELDS |
| 2 ONLY | F 7110 | 15" X 4.5" X 4 BOLT WHEELS |

SIZE: 7" X 51' DOUBLE BELT DRIVE AUGER

| QUANTITY REQUIRED | BUNDLE NUMBER | DESCRIPTION |
|---|---|---|
| 1 ONLY | F 7001 | BASIC AUGER, 7" X 22' (46' & 51') |
| 1 ONLY | F 8005 | EXTENSION AUGER, 7" X 29' |
| 1 ONLY | F 8025 | UNDERCARRIAGE, 2 3/8" X 14'6" |
| 1 ONLY | F 8035 | LIFT ARMS, 2 1/2" X 12' |
| 1 ONLY | F 8045 | CRATE OF PARTS, 7" X 51' |
| 1 ONLY | F 0050 | MOTOR MOUNT |
| 1 ONLY | F 7053 | HANGER AND LEVELLING ROD, 51" |
| 1 ONLY | F 7071 | INTAKE ASSEMBLY, 7" X 26" |
| 1 ONLY | F 7097 | DRIVE LINE SHIELDS |
| 2 ONLY | F 7110 | 15" X 4.5" X 4 BOLT WHEELS |

# SHIPPING BUNDLES

## FARM KING PORTABLE AUGERS

SIZE: 8" X 41' DIRECT-DRIVE PTO AUGERS

| QUANTITY REQUIRED | BUNDLE NUMBER | DESCRIPTION |
|---|---|---|
| 1 ONLY | F 5003 | BASIC AUGER, 8" X 22' DIRECT PTO (41') |
| 1 ONLY | F 7006 | EXTENSION AUGER, 8" X 19' DIRECT DRIVE |
| 1 ONLY | F 8027 | UNDERCARRIAGE, 2 3/8" X 12'3" |
| 1 ONLY | F 8033 | LIFT ARMS, 2 3/8" X 8'8" |
| 1 ONLY | F 0053 | PTO SHAFT |
| 1 ONLY | F 8062 | CRATE OF PARTS, 8" X 41' DIRECT-DRIVE |
| 1 ONLY | F 7072 | INTAKE ASSEMBLY, 8" X 28" |
| 1 ONLY | F 7098 | DRIVE LINE SHIELDS |
| 2 ONLY | F 7110 | 15" X 4.5" X 4 BOLT WHEELS |

SIZE: 8" X 46' DIRECT-DRIVE PTO AUGERS

| QUANTITY REQUIRED | BUNDLE NUMBER | DESCRIPTION |
|---|---|---|
| 1 ONLY | F 7004 | BASIC AUGER, 8" X 22' DIRECT PTO (46' & 51') |
| 1 ONLY | F 7007 | EXTENSION AUGER, 8" X 24' DIRECT-DRIVE |
| 1 ONLY | F 8024 | UNDERCARRIAGE, 2 3/8" X 13' |
| 1 ONLY | F 8034 | LIFT ARMS, 2 1/2" X 10'4" |
| 1 ONLY | F 0053 | PTO SHAFT |
| 1 ONLY | F 8061 | CRATE OF PARTS, 8" X 46' DIRECT-DRIVE |
| 1 ONLY | F 7072 | INTAKE ASSEMBLY, 8" X 28" |
| 1 ONLY | F 7099 | DRIVE LINE SHIELDS |
| 2 ONLY | F 7110 | 15" X 4.5" X 4 BOLT WHEELS |

SIZE: 8" X 51' DIRECT-DRIVE PTO AUGERS

| QUANTITY REQUIRED | BUNDLE NUMBER | DESCRIPTION |
|---|---|---|
| 1 ONLY | F 7004 | BASIC AUGER, 8" X 22' DIRECT PTO (46' & 51') |
| 1 ONLY | F 7008 | EXTENSION AUGER, 8" X 29' DIRECT-DRIVE |
| 1 ONLY | F 8025 | UNDERCARRIAGE, 2 3/8" X 14'6" |
| 1 ONLY | F 8035 | LIFT ARMS, 2 1/2" X 12' |
| 1 ONLY | F 0053 | PTO SHAFT |
| 1 ONLY | F 8060 | CRATE OF PARTS, 8" X 51' DIRECT-DRIVE |
| 1 ONLY | F 7072 | INTAKE ASSEMBLY, 8" X 28" |
| 1 ONLY | F 7100 | DRIVE LINE SHIELDS |
| 2 ONLY | F 7110 | 15" X 4.5" X 4 BOLT WHEELS |

**********

| | | |
|---|---|---|
| F 1854 | BOX----------) | CONVERSION KIT FOR 8" X 46' |
| F 1855 | HANGER--------) | |
| F 1856 | DRIVELINE-----) | |
| F 1851 | BOX----------) | CONVERSION KIT FOR 8" X 41' |
| F 1852 | HANGER--------) | |
| F 1853 | DRIVELINE-----) | |
| F 1857----------) | | CONVERSION KIT FOR 8" X 51' |
| F 1858----------) | | |
| F 1859----------) | | |

# SHIPPING BUNDLES

## FARM KING PORTABLE AUGERS

SIZE: 8" X 41' BELT-DRIVE PTO AUGERS

| QUANTITY REQUIRED | BUNDLE NUMBER | DESCRIPTION |
|---|---|---|
| 1 ONLY | F 7003 | BASIC AUGER, 8" X 22' BELT PTO (41') |
| 1 ONLY | F 7018 | EXTENSION AUGER, 8" X 19' BELT-DRIVE |
| 1 ONLY | F 8027 | UNDERCARRIAGE, 2 3/8" X 12'3" |
| 1 ONLY | F 8033 | LIFT ARMS, 2 3/8" X 8'8" |
| 1 ONLY | F 8046 | CRATE OF PARTS, 8" X 41' BELT-DRIVE |
| 1 ONLY | F 0053 | PTO SHAFT |
| 1 ONLY | F 7052 | HANGER AND LEVELLING ROD, 44" |
| 1 ONLY | F 7064 | BELT-DRIVE PTO KIT, 41' & 46' |
| 1 ONLY | F 7072 | INTAKE ASSEMBLY, 8" X 28" |
| 1 ONLY | F 7095 | DRIVE LINE SHIELDS |
| 2 ONLY | F 7110 | 15" X 4.5" X 4 BOLT WHEELS |

SIZE: 8" X 46' BELT-DRIVE PTO AUGERS

| QUANTITY REQUIRED | BUNDLE NUMBER | DESCRIPTION |
|---|---|---|
| 1 ONLY | F 7005 | BASIC AUGER, 8" X 22' BELT PTO (46' & 51') |
| 1 ONLY | F 7019 | EXTENSION AUGER, 8" X 24' BELT-DRIVE |
| 1 ONLY | F 8024 | UNDERCARRIAGE, 2 3/8" X 13' |
| 1 ONLY | F 8034 | LIFT ARMS, 2 1/2" X 10'4" |
| 1 ONLY | F 8047 | CRATE OF PARTS, 8" X 46' BELT-DRIVE |
| 1 ONLY | F 0053 | PTO SHAFT |
| 1 ONLY | F 7052 | HANGER AND LEVELLING ROD, 44" |
| 1 ONLY | F 7064 | BELT-DRIVE PTO KIT, 41' & 46' |
| 1 ONLY | F 7072 | INTAKE ASSEMBLY, 8" X 28" |
| 1 ONLY | F 7096 | DRIVE LINE SHIELDS |
| 2 ONLY | F 7110 | 15" X 4.5" X 4 BOLT WHEELS |

SIZE: 8" X 51' BELT-DRIVE PTO AUGERS

| QUANTITY REQUIRED | BUNDLE NUMBER | DESCRIPTION |
|---|---|---|
| 1 ONLY | F 7005 | BASIC AUGER, 8" X 22' BELT PTO (46' & 51') |
| 1 ONLY | F 7020 | EXTENSION AUGER, 8" X 29' BELT-DRIVE |
| 1 ONLY | F 8025 | UNDERCARRIAGE, 2 3/8" X 14'6" |
| 1 ONLY | F 8035 | LIFT ARMS, 2 1/2" x 12' |
| 1 ONLY | F 8048 | CRATE OF PARTS, 8" X 51' BELT-DRIVE |
| 1 ONLY | F 0053 | PTO SHAFT |
| 1 ONLY | F 7053 | HANGER AND LEVELLING ROD, 51" |
| 1 ONLY | F 7065 | BELT-DRIVE PTO KIT, 51' |
| 1 ONLY | F 7072 | INTAKE ASSEMBLY, 8" X 28" |
| 1 ONLY | F 7097 | DRIVE LINE SHIELDS |
| 2 ONLY | F 7110 | 15" X 4.5" X 4 BOLT WHEELS |
| | F7115 | OPEN INTAKE ASSEMBLY, 8" |

# FULTON MANUFACTURING CORP.

P.O. BOX 19903 MILWAUKEE, WISCONSIN 53219

# Owner's Manual & Parts List

K2550 Basic Work Winch; 15.8:1 Gear Ratio; Automatic Brake

KX2550 Basic "KX" Winch, 15.8:1 Gear Ratio; Automatic Brake

INSTRUCTION FOR SAFER OPERATION

This winch is of a general purpose design and the load rating is based on an intermittent duty cycle. This winch is not designed to be a human hoist and should never be operated when there are persons positioned on or under the load being moved. The brake is actuated by turning the handle. The load-lok brake is designed to hold the load whenever the handle is released.

I. MOUNTING INSTRUCTIONS

1. Slide slot of handle onto the input shaft as shown in Figure 1 and fasten with 1/2-13 hex. locknut.
2. Bolt or weld the winch to a structure capable of supporting at least 5 times the load that the winch will pull. Fasten the winch with (4) 3/8 dia. bolts, S.A.E. Grade 5, (minimum strength). (Not supplied).

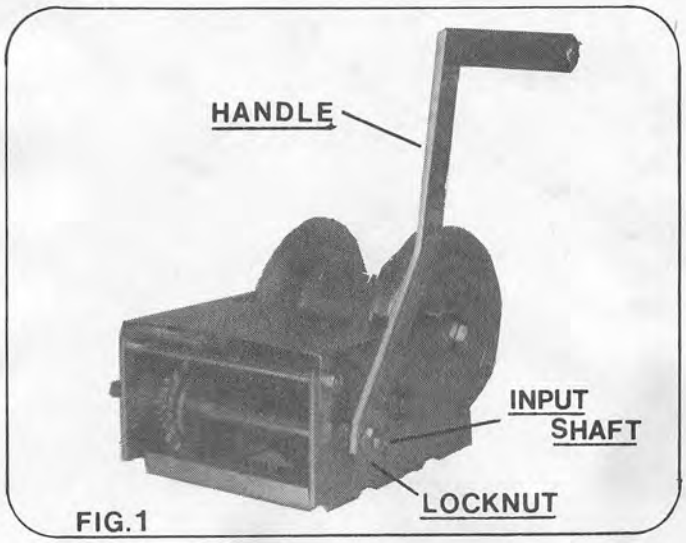


FIG.1

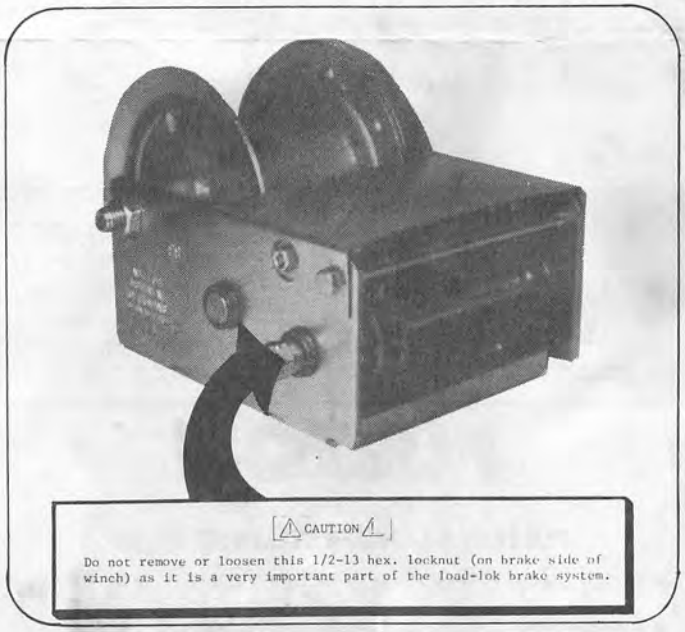

⚠ CAUTION ⚠

Do not remove or loosen this 1/2-13 hex. locknut (on brake side of winch) as it is a very important part of the load-lok brake system.

II. CABLE INSTRUCTIONS

1. Feed cable into the bottom of the drum using 5/16 dia. 7x19 galv. aircraft quality cable, max. 60 ft.
2. Have cable extend minimum of 2" past cable keeper.
3. All nuts for the cable clamp should be on the outside of the drum. See Figure 2.
4. Replace the cable if it is worn, frayed, or kinked.
5. Always be sure the cable is pulling straight off the winch and not contacting the frame or drum sides. Always prevent the cable from rubbing against fixed objects.

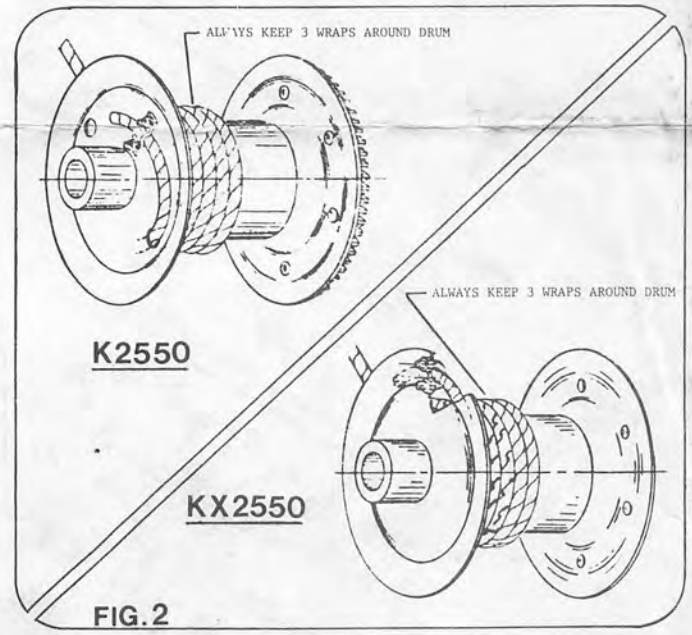


FIG.2

III. OPERATING PROCEDURE

A. TO PULL IN THE CABLE OR RAISE THE LOAD
1. The cable must be securely fastened to the object or the load and to the winch drum.
2. Be sure that the cable and hook are strong enough for the load and not damaged.
3. Turn the handle clockwise and listen for the clicking sound of the ratchet(s) for the load-lok brake.

B. TO LET OUT CABLE OR LOWER THE LOAD
1. Turn handle counterclockwise (no clicking sounds).
2. When cranking cable off the drum, some additional weight should be added at hook end to eliminate "bird nesting" of the cable still on the drum.

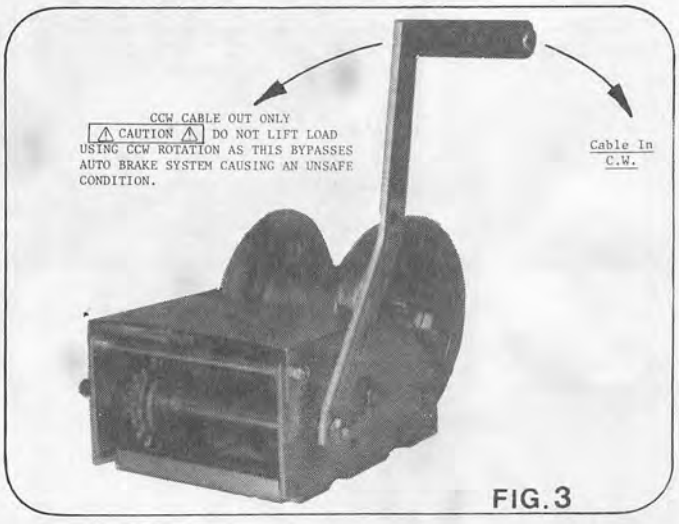


FIG.3

RECOMMENDED MAINTENANCE:

1 - APPLY AUTOMOTIVE TYPE GREASE TO BOTH THE PINION AND DRUM GEAR TEETH, AND TO THE O.D. OF DRUM BEARING, ITEM 44.

2 - APPLY A FEW DROPS OF AUTOMOTIVE ENGINE OIL TO RATCHET PAWL PIVOT(S), BUSHINGS, AND PINION THREADS.

3 - CHECK BRAKE DISCS, ITEM 17, FOR WEAR. IF LESS THAN 1/16 OF AN INCH THICK, CRACKED, OR BROKEN, IT SHOULD BE REPLACED.

4 - CHECK FOR PROPER RATCHET OPERATION AS FOLLOWS: WHEN CRANKING CABLE IN, A LOUD CLICKING SOUND SHOULD BE HEARD. WHEN CRANKING CABLE OUT, THERE IS NO CLICKING AND THE RATCHET PAWL(S) SHOULD BE FULLY ENGAGED INTO THE RATCHET GEAR TEETH.

**REMEMBER WORN OUT PARTS CAUSE UNSAFE CONDITIONS**

1. Do not get any oil or grease on the brake disc fibers.
2. Be sure that the cable on the winch is strong enough to support the load to be lifted. ALWAYS inspect the cable and hook before each use to make sure they are not damaged. Replace the cable if it is frayed or kinked. If the cable or hook breaks, the cable can act like a whip and can inflict serious injury to anyone in the path of the cable.
3. NEVER stand along side the winch cable, or guide the cable with your hands.
4. NEVER permit anyone on or under the load that is being pulled or lifted.
5. NEVER operate with wet or oily hands and ALWAYS use a firm grip on the handle.
6. NEVER leave a weight hanging by the winch while the winch is unattended, as unauthorized persons may attempt to operate the winch, thereby creating an unsafe condition.

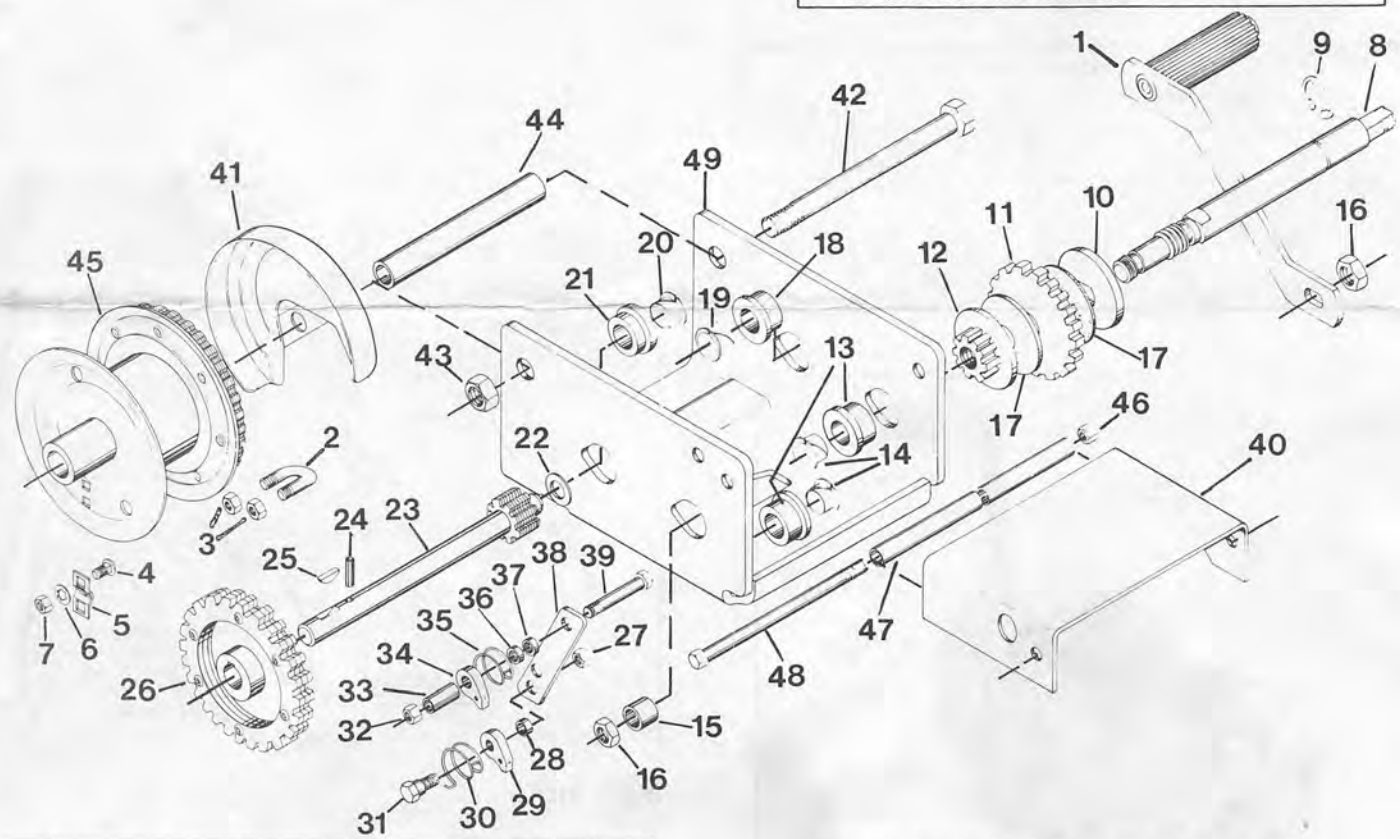


| ITEM | DESCRIPTION | KX2550 | K2550 | ITEM |
|---|---|---|---|---|
| 1 | Handle | 2435S01 | 2461S01 | 1 |
| 2 | Cable Clamp | Cable Keeper | | 2 |
| 3 | Locknut | Kit 6017S01 | Not Used | 3 |
| 4 | Bolt | | | 4 |
| 5 | Cable Clamp | Not Used | Cable Keeper | 5 |
| 6 | Lockwasher | | Kit 5621S01 | 6 |
| 7 | Nut | | | 7 |
| 8 | Input Shaft | | | 8 |
| 9 | Retaining Ring | | | 9 |
| 10 | Brake Disc | Input Shaft | Input Shaft | 10 |
| 11 | Ratchet Gear | Kit | Kit | 11 |
| 12 | Pinion Gear | 1566S01 | 1565S01 | 12 |
| 13 | Bushing | | | 13 |
| 14 | Insert | | | 14 |
| 15 | Spacer | | | 15 |
| 16 | Nut | | | 16 |
| 17 | Friction Disc | Kit 1578S00 | Kit 1578S00 | 17 |
| 18 | Bushing | | | 18 |
| 19 | Insert | Intermediate | Intermediate | 19 |
| 20 | Insert | Shaft | Shaft | 20 |
| 21 | Bushing | Kit | Kit | 21 |
| 22 | Washer | 1568S01 | 1569S01 | 22 |
| 23 | Intermediate Shaft | | | 23 |
| 24 | Rollpin | | | 24 |
| 25 | Woodruff Key | | | 25 |
| 26 | Gear | | | 26 |
| 27 | Nut | | | 27 |
| 28 | Spacer | Ratchet Kit | Ratchet Kit | 28 |
| 29 | Ratchet Pawl | 6730S00 | 6730S00 | 29 |
| 30 | Spring | | | 30 |
| 31 | Shoulder Bolt | | | 31 |
| 32 | Nut | | | 32 |
| 33 | Spacer | | | 33 |
| 34 | Ratchet Pawl | Ratchet Kit | | 34 |
| 35 | Spring | 1567S00 | Not Used | 35 |
| 36 | Spacer | | | 36 |
| 37 | Spacer | | | 37 |
| 38 | Support | | | 38 |
| 39 | Bolt | | | 39 |
| 40 | Cover | 9946S01 | Not Used | 40 |
| 41 | Drum Cover | 12153S01 | Not Used | 41 |
| 42 | Drum Bolt T-Grade 5 | * | * | 42 |
| 43 | Locknut | * | * | 43 |
| 44 | Drum Spacer | ** | ** | 44 |
| 45 | Drum Assembly | ** | ** | 45 |
| 46 | Locknut | * | * | 46 |
| 47 | Frame Spacer | ** | ** | 47 |
| 48 | Bolt | * | * | 48 |
| 49 | Frame | ** | ** | 49 |

* Std. Hardware - Purchase Locally
** Part Not Sold Separately

Replacement Parts Are Available From Your Dealer Or The Factory
Use Genuine Fulton Parts

Please order by specifying:

Model Number:

Name of Part or Kit:

For special winch configuration, contact the Service Department.


FULTON MANUFACTURING CORPORATION
P.O. Box 19903
Milwaukee, Wisconsin 53219


**LIMITED WARRANTY**

All Fulton® hand winches are warranted to the original consumer purchaser to be free from defects in material and workmanship under normal use and service, ordinary wear and tear excepted, for a period of one (1) year from date of purchase as shown on purchaser's receipt.

Fulton will repair or replace, AT ITS OPTION AND FREE OF CHARGE, during the warranty period, any part which proves defective in material or workmanship, provided the product is returned to our factory for our examination. TRANSPORTATION CHARGES PREPAID at the address below. THIS WARRANTY IS LIMITED TO DEFECTIVE PARTS REPAIR AND/OR REPLACEMENT ONLY. LABOR CHARGES AND/OR DAMAGE INCURRED IN INSTALLATION, REPAIR, OR REPLACEMENT AS WELL AS INCIDENTAL AND CONSEQUENTIAL DAMAGES CONNECTED THEREWITH ARE EXCLUDED.

Some states do not allow the exclusion or limitation of incidental or consequential damages, so the above limitation or exclusion may not apply to you.

Any damage to the hand winch, jack or stabilizer as a result of misuse, abuse, neglect, accident, improper installation, alteration, or repair (not our own), or any use contrary to our instructions, WILL VOID THE WARRANTY.

This warranty gives you specific legal rights, and you may also have other rights which vary from state to state. In the event of a problem with warranty service or performance, you may be able to go to a small claims court, a state court, or federal district court.

# FULTON


**FULTON MANUFACTURING CORP.**

P.O. BOX 19903 • MILWAUKEE, WISCONSIN 53219 • (414) 321-4810

a subsidiary of *Masco Corporation* Taylor, Michigan



F1849 9-15-83 Printed in U.S.A.

LOOK OUT FOR **CHILDREN**.
TEACH YOUR CHILDREN SAFETY.
(INFORM THEM OF DANGERS AROUND MACHINES.)

**MANUAL** MUST BE READ AND UNDERSTOOD BY **OPERATOR**.

## TRANSPORT

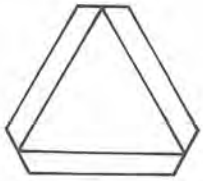

**EMBLEMS** MUST BE VISIBLE.

ALWAYS MOVE EQUIPMENT IN LOW OR DOWN POSITIONS ESPECIALLY AROUND **POWER LINES**.

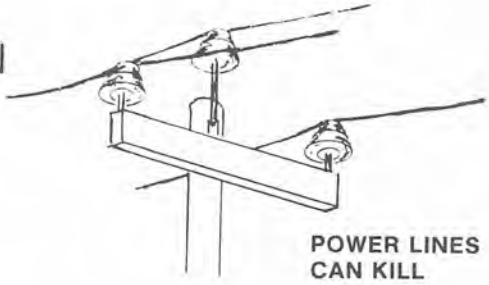

**NEVER** LEAVE EQUIPMENT IN RAISED POSITIONS.

## SERVICE

SERVICE EQUIPMENT ONLY WHEN **STOPPED** AND SECURELY **BLOCKED** IF IN RAISED POSITIONS.

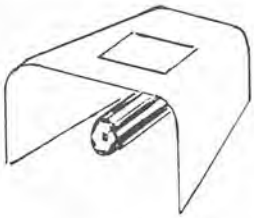

KEEP ALL **GUARDS** AND **SHIELDS** IN PLACE.

**REPLACE** DAMAGED OR WORN PARTS. FRAYED CABLES AND HOSES ARE DANGEROUS.

DO NOT CHANGE FACTORY SETTINGS.

KEEP **DECALS** CLEAN AND LEGIBLE.
(REPLACEMENTS NORMALLY AVAILABLE)

# FARM KING ALLIED INC.

A John Buhler Company

## WAREHOUSE LOCATIONS

| MONCTON, NB | EDMONTON, AB | DORION, PQ | WOODSTOCK, ON | REGINA, SK |
|---|---|---|---|---|
| (506) 388-3008 | (403) 962-6991 | (514) 455-7946 | (519) 539-0435 | (306) 781-2300 |

PRINTED IN CANADA